| LET | ALTERATION | DATE | BY |
|---|---|---|---|
| | | | |

| LET | ALTERATION | DATE | BY |
|---|---|---|---|
| A | IN REPLACE BLK REMVD PRIOR TO FINAL ASSY. FOR FITS FROM REPLACE FEEL TO ADJUST (ADD) | 1-22-43 | |
| B | ON PAGE DESIGNATION ADD (-5) PARTS ON (FIXTURE) AND ADDED DESIGNATION (-5) (GROUND) TO (LOCATING BLOCK) IN REF TO "24 DIA." WITH (NOTE) | 2-8-43 | |
| C | ON FORM ADDED "24" TO BOTH NOTE "CORE SLOTS" AND WASH. | 2-15-43 | |

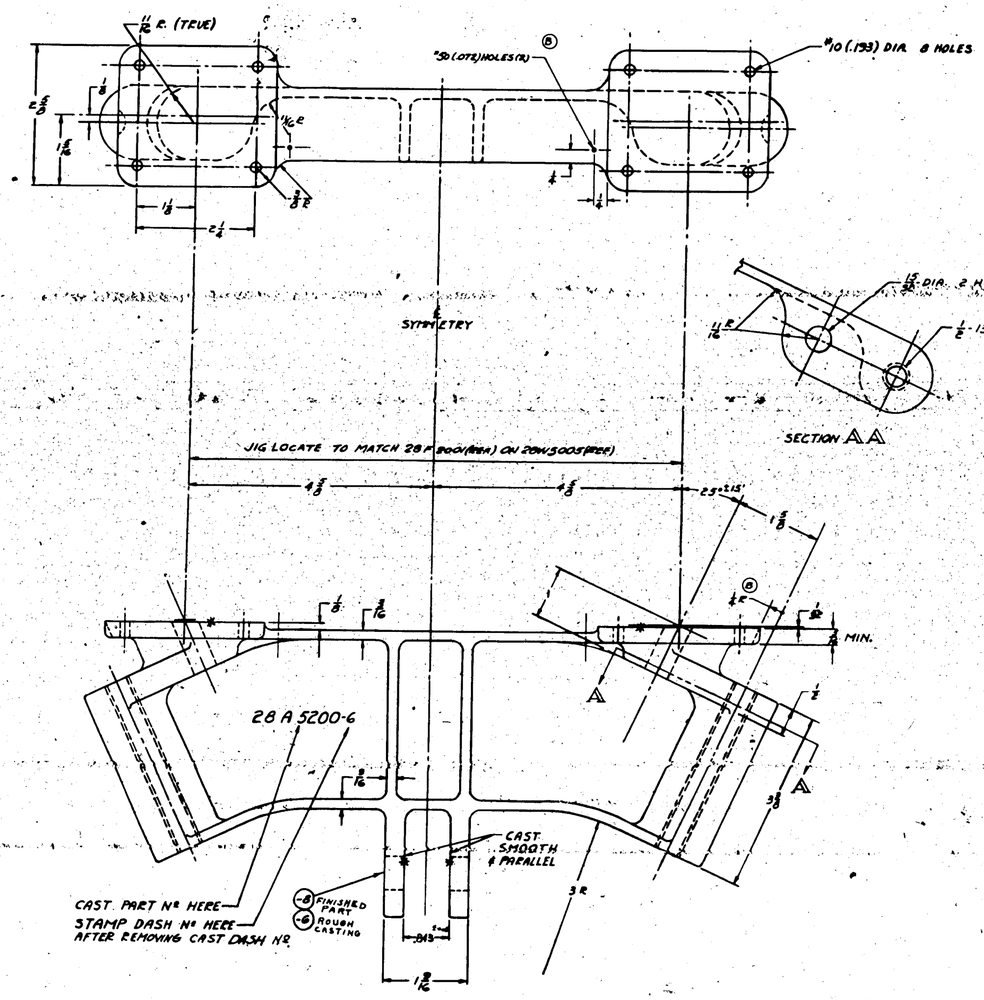


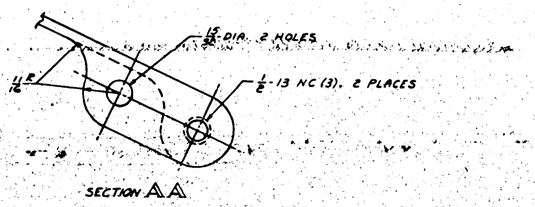


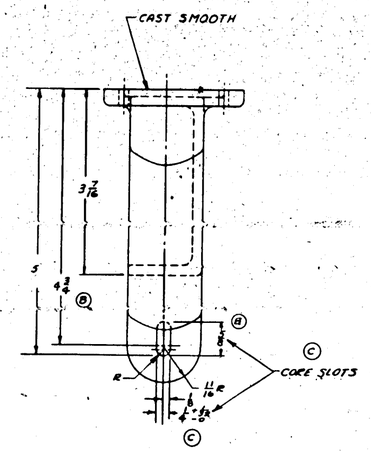


NOTES:-
BREAK ALL CORNERS 1/16 R. EXCEPT WHERE SHOWN AND NOTED OTHERWISE. - ALL FILLETS TO BE 3/16.
MINIMUM WALL THICKNESS TO BE 3/16.

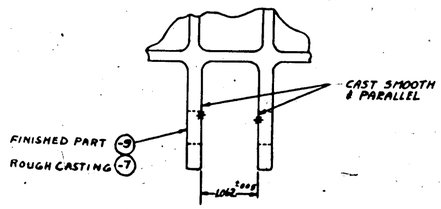


-7 IDENTICAL TO -6 EXCEPT AS SHOWN

CLASS I INSPECTION.

H 49

NOTE: SURFACES INDICATED BY ASTERISK(*) ARE TO RECEIVE A CONVENTIONAL FINISH UNLESS CASTING IS MADE BY PERMANENT MOLD ANTIOCH, GOBRINK OR EQUIVALENT PROCESS.

APPROVED FOR TOOLING BY

| PART NO. | STOCK | MATERIAL | SPEC. |
|---|---|---|---|
| -9 | FINISHED CASTING | MAGNESIUM | DOMESTIC 13786 |
| -8 | FINISHED CASTING | MAGNESIUM | DOMESTIC 13786 |
| -7 | ROUGH CASTING | AL-ALL | AN-QQ-A-250/12 |
| -6 | ROUGH CASTING | AL-ALL | AN-QQ-A-250/12 |

PARTS LIST FOR ASSY.

| | -0 | -2 | -3 | -4 | -5 |
|---|---|---|---|---|---|
| REQ. | | | | | |

| | | | |
|---|---|---|---|
| DRAWN | Meola | P-GP | |
| DESIGN TRACE | | FINISH | |
| NAME | CHOCK-ARMT BRITISH BOMB ADAPTER-CASTING | | |
| CONSOLIDATED AIRCRAFT CORP. San Diego, Calif. | | | |
| SIZE | J | 28 A 5200 | |